ASSUN
DRIVING THE FUTURE

AM-16P Series

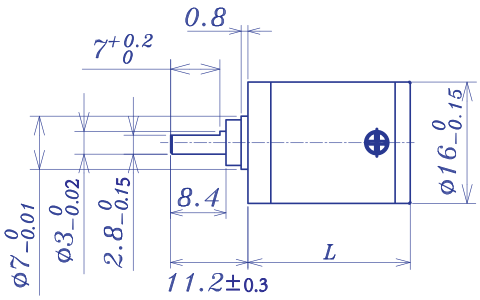

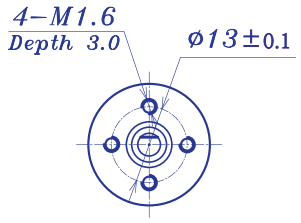

GEARBOX CHARACTER

Gear type	Straight teeth	Average backlash on load	≤3°
Output shaft	Stainless steel hardened	Radial Play	≤0.04
Main gear	Alloy Steel	Permisssible axial load	≤10N
Ring gear	Steel	Permissible force press fits	≤50N (5mm from mounting face)
Adapter plate	Copper	Recommended inut speed	≤10000RPM
Bearing AT output	Ball bearing	Operating temperature range	-20°C ~ +100°C
Axial play	0-0.3	Operating humidity range	10-90%RH
Directions	CW/CCW		

GEARBOX DATA

Number of stage	1	2		3			4			5	
Reduction ratio X:1	3.3	11	19	37	62	97	175	370	591	742	1996
	3.8	12	20	41	64	104	198	410	690	1014	2458
	4.4	14	24	47	72	109	231	455	850	1185	3027
	5.4	16	29	53	76	128	270	522		1386	3728
		18			84	158	316	561		1621	4592
Reduction ratio absolute	63/19	3969/361	3249/169	250049/6859		1215/16	21625/1216		6561/16	759375/1024	
	15/4	945/76	81/4	59635/1444		185193/2197	50625/256		5000/211/10985	10965375/10816	
	57/13	225/16	1539/65	3375/64		45927/475	192375/832		1240029/2375	41668425/35152	
	27/5	855/52	729/25	14175/304		87723/845	731025/2704		2368521/4225	158340015/114244	
		1701/95		12825/208		2187/20	2777895/8788		59049/100	601692057/371293	
				204687/3211		41553/325	10556001/28561		1121931/625	285012027/142805	
				48735/676		19683/125			531441/625	135005697/54925	
										63950067/21125	
										30292137/8125	
										14348907/3125	
Gearbox lenght "L" (mm)	18.5	22.4		26.3			30.2			34.0	
Max. continuous torque (N.m)	0.3	0.5		0.6			0.7			0.7	
Max. intermitten torque (N.m)	0.5	0.7		0.9			1			1	
Gearbox efficiency	90%	81%		72%			65%			59%	
Moment of inertia range (g.cm²)	0.06	0.05		0.05			0.05			0.05	
Gearbox weight approx (g)	23	28		31			36			40	
Gearbox model	AM-16PA-X-01	AM-16PB-X-01		AM-16PC-X-01			AM-16PD-X-01			AM-16PE-X-01	

AM-16P Example of combination

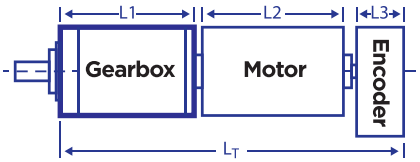

INPUT GEARBOX DATA

Modulus	0.3			
Press angle	20°			
Teeth number	10	13	16	19
Max gear hole "A"	1.5	2.0		
Max motor shaft	1.5	2.0		
Motor dimension "D"	6.0			

MOTOR DIMENSION

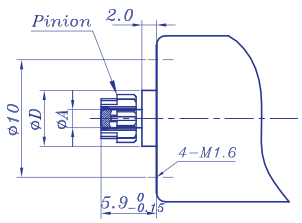

Recommend Motor:

Coreless Motor:
AM-CL1642MA

Coreless Motor (w/E):
AM-CL1623MAN
AM-CL1626MAN
AM-CL1633MAN
AM-CL1643MAN

Brushless Motor (w/E)
AM-BL1640A/B

Recommend Encoder:
Suitable for Coreless Motor
Encoder S: AM-EN1611S***

Suitable for Brushless Motor
Encoder S: AM-EN1611S***
Encoder T: AM-EN1612T***

GEARBOX MOTOR LENGTH "LT"

Gear motor length L_T	52.2	59.1	70	82.2
Gearbox length L_1	18.5	22.4	26.3	30.2
Motor length L_2	23	26	33	40
Encoder length L_3	10.7	10.7	10.7	12

Download datasheet: https://assunmotor.com/documents-download

2023-A Edition. Specifications are subject to change without notice. Copyright Assun Motor Pte Ltd. All Rights Reserved.